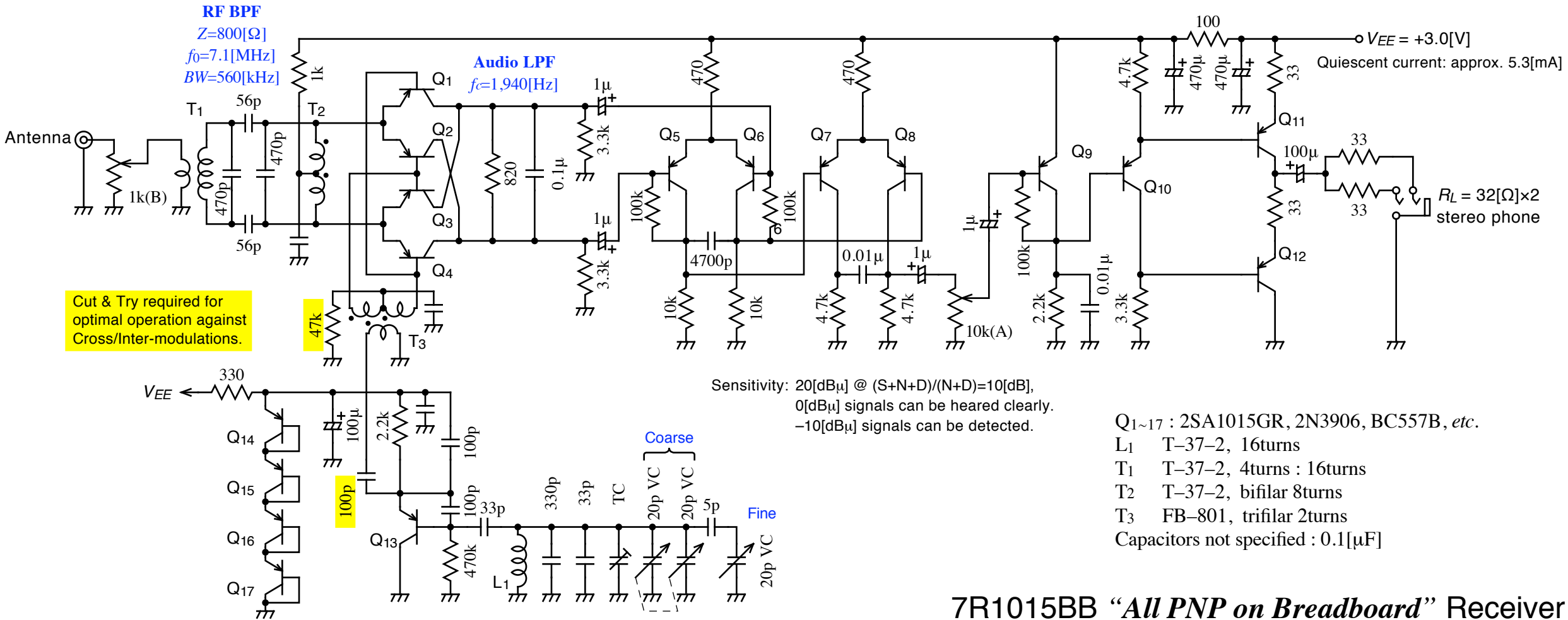

7R1015BB *"All PNP on Breadboard"* Receiver

©2009 by Cosy MUTO, JH5ESM. All right reserved.